IPAD5 No Power ON repair

Fault model: ipad 5

Symptom: No Power ON



Maintenance process: stop at Fixed current 40MA after power-on trigger, link computer machine in DFU mode, Recovery error 40, brush into recovery mode and found no serial number.Combined with the error code.The fault is judged to be in the NAND or NAND circuit.The disassemble found that the NAND had traces of dismantling.Measurements NAND 1.8 and 3.3V have no VCC.Finding the drawings The VCC is converted from the U3850. Due to the removal of the NAND, the VCC tube may be blown by the Void welding. After reinstalling, the VCC returns to normal, but the fault remains.Only the NAND can be removed, and the NAND is removed. The solder pad has the solder dot dropped.

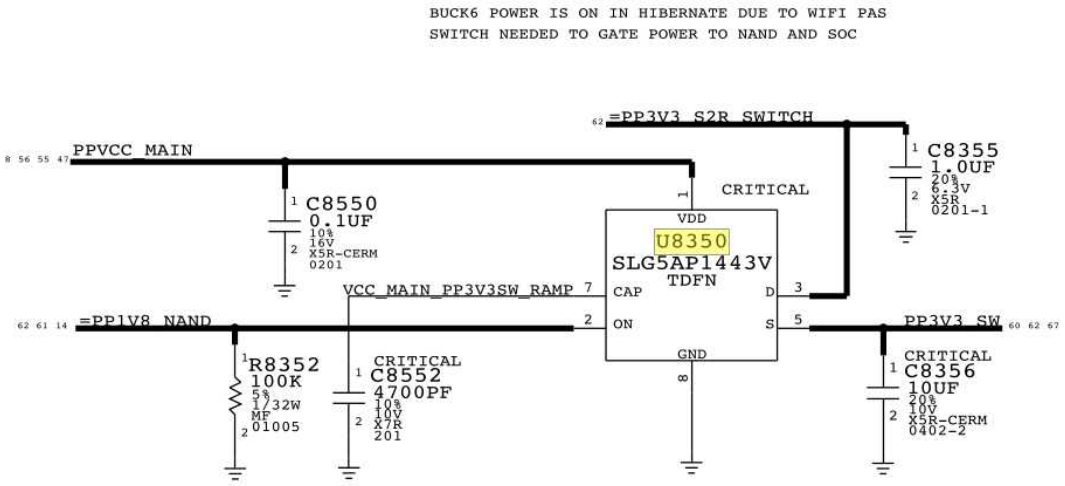

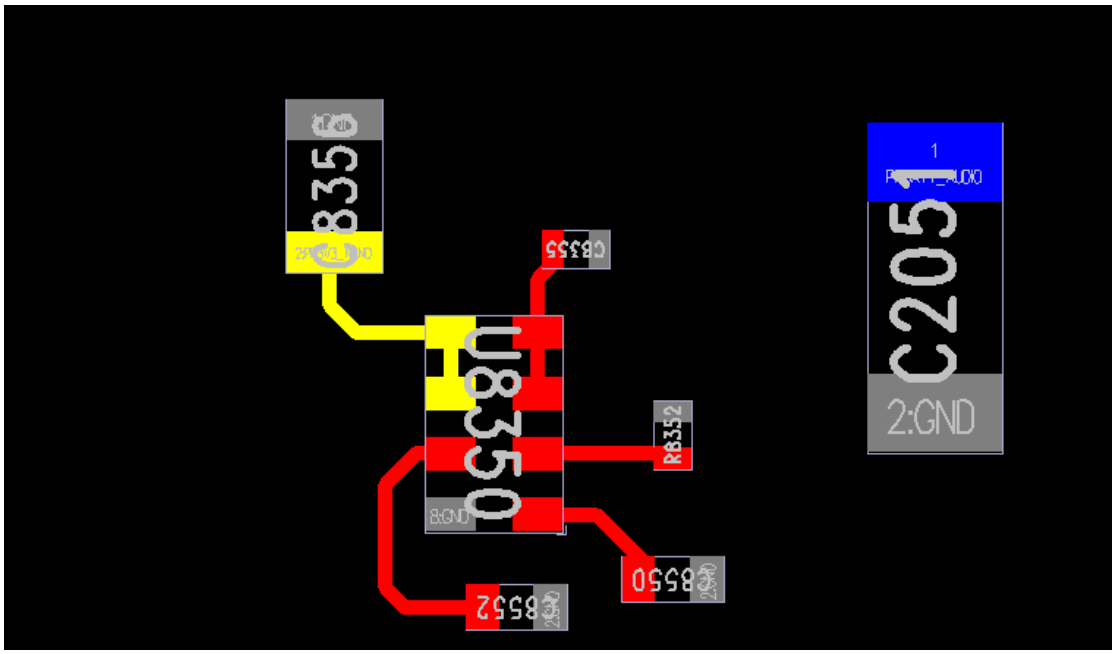

Repair result: Replenish the solder pad, replace the NAND, and repair the fault.

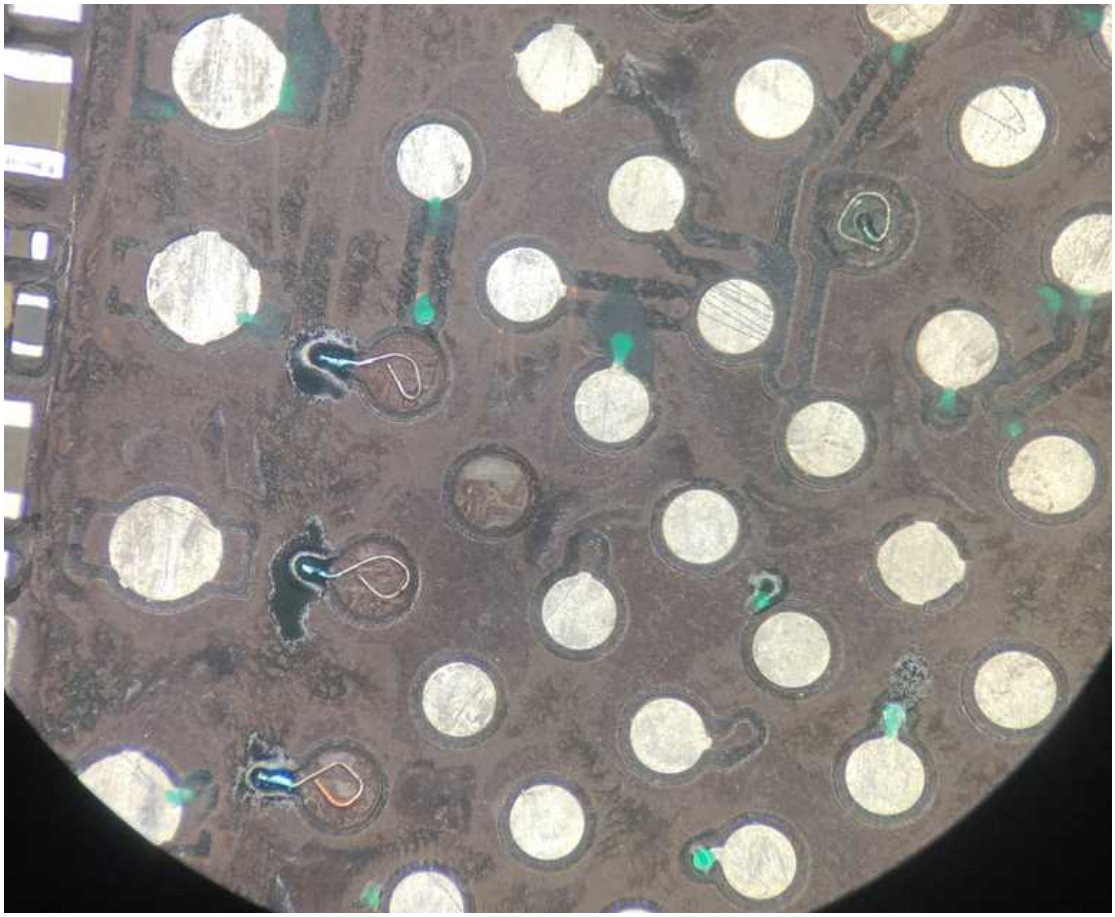


Hola
Pulsa el botón de inicio
para abrir